©COPYRIGHT by MEIKO

1.0	machine connection: drain connection hose, DN 22 hose fitted as odour trap in interior of machine
1.1	drain (max. 700 mm above finished floor level), DN 50
2.0	Machine connection: fresh water supply, G 3/4"
2.2	Soft cold water 10°C, DN 15, G 3/4 a max. 0,54 mmol/l $CaCO_3$ (max. 3°dH) Flow rate: 5 l/min Minimum flow pressure: 60 kPa / 0.6 bar in front of solenoid valve Maximum pressure: 500 kPa / 5.0 bar stopcock and fine screen ≤ 25 µm
3.0	Machine connection: electrical connection cable 5G 6mm²
3.1	electricity supply to the machine: 3N PE 400V ~ 50Hz nominal current / - capacity: 17.5 A / 9.2 kW Fuse protection: 20 A Voltage equalising cable The master switch must be provided on site
	Note: Electrical equipment suitable for supply voltage: 3N PE 380-415 V 50 Hz / 1N PE 220-240 V 50 Hz
6.0	Heat load of warewash area The values apply for the following room conditions: Room temperature 22 °C, rel. humidity 55 % Recommended suction area according to German EN 16282 or any local regulations have to be observed to determine ventilation of wash areas The total heat load includes 6.1
6.1	Heat load of the machine in normal washing operation: for 25 programme cycles/h total 2.7 kW, perceptible 1.8 kW, latent 0.9 kW
	For the total space load, all other space loads must be considered. The space ventilation must be designed in accordance with EN 16282.

all cables, pipes etc leaving machine 1,8 m

the position of the connection piping can also be mirror-inverted!

Machine Equipment

(A) Entry height

(D) Rinse agent pipe and suction lance

(E) Detergent dosing unit with suction lance

Automatic hood system

Feeding table on site

Discharge table on site

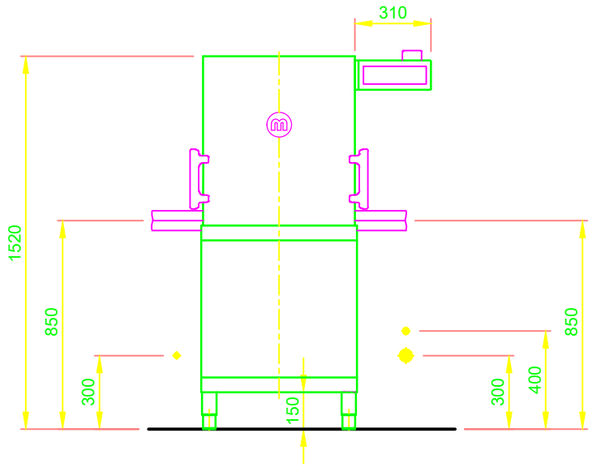

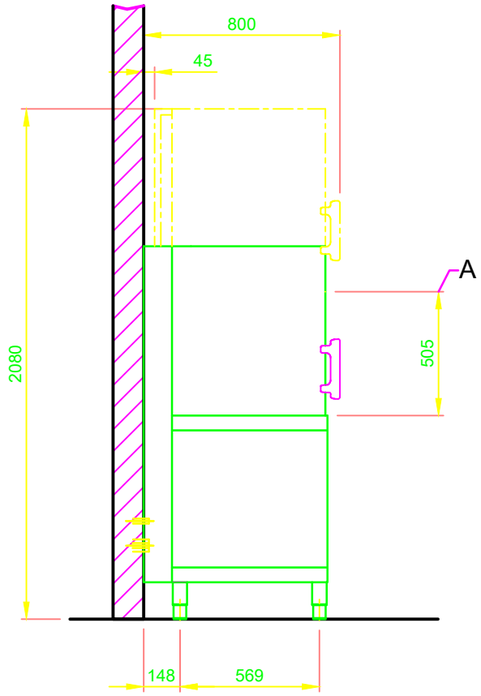

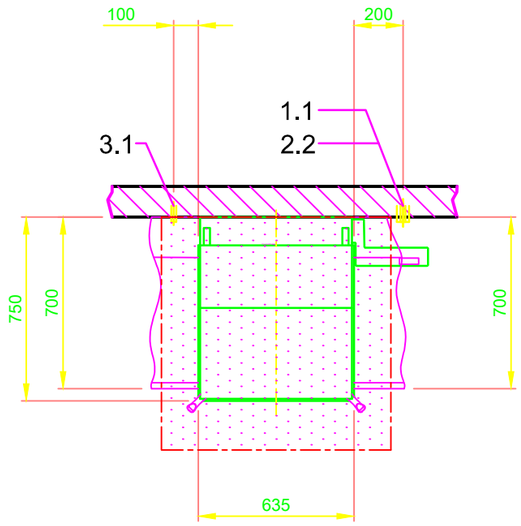

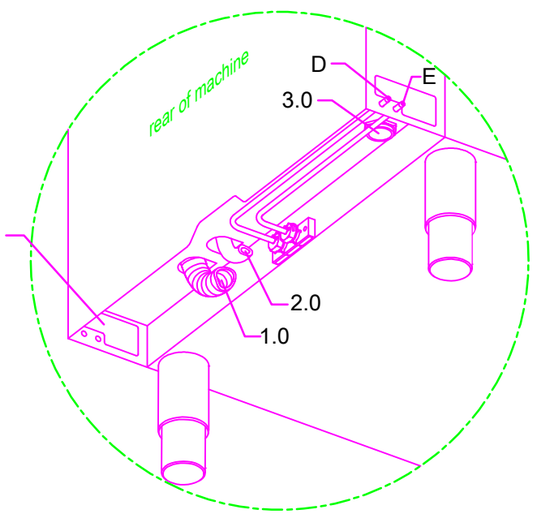

Optional right/left opening for relocating the connection line

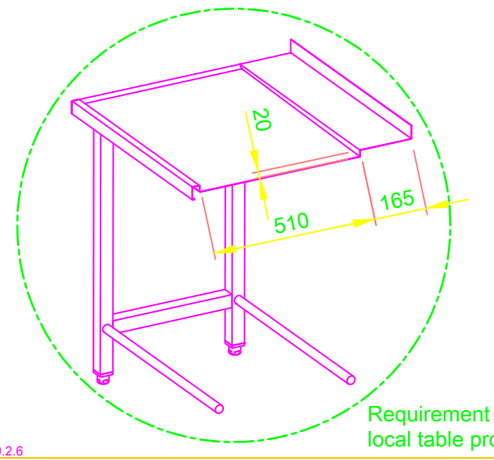

Requirement for local table profile

OM000029799.2.6

©COPYRIGHT by MEIKO

MEIKO Clean Solutions (SEA) Sdn. Bhd.
No 8, Lorong Teknologi C (OMNI),
Taman Sains Selangor 1, Kota Damansara,
47810 Petaling Jaya, Selangor, Malaysia
Tel: +60 3 6151 5461 Fax: +60 3 6151 5464
E-MAIL: support.asia@meiko-asia.com

This drawing may not be neither passed to third parties for their information or copied or used for competitive purposes without our consent. All rights reserved. We reserve the right to make changes resulting from technical progress. This drawing was computer generated and is not subject to the checking and any release process; it is also not subject to change management.
Please note:
This document is only valid in conjunction with the conditions defined in Supplementary Sheet "Important Information". These can be requested from the manufacturer or downloaded from the Partnernet.

Revision

Reference DISHWASHER STANDARD DRAWING / MYS TYPE: CROCKERY		Type M-ICLEAN HM M2
Drawing-No. S00101143		Order-No.
Scale 1:25	drawn: 06.02.2021 m-iplan	checked: 06.02.2021 m-iplan

MYS EN

©COPYRIGHT by MEIKO